# IQ9N Microinverters

The IQ9N Microinverter, a high-powered 427 VA grid-interactive device, is engineered to maximize the performance of today's most advanced solar modules, delivering exceptional energy output, industry-leading reliability, and cutting-edge safety features.

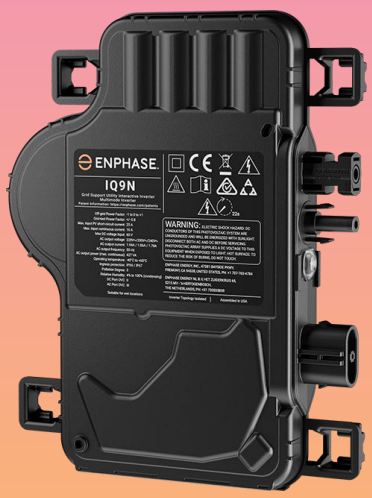


Enphase 25 year warranty

| Key specifications | IQ9N-A-INT |
|---|---|
| Maximum apparent power | 427 VA |
| Nominal grid voltage | 230 V |
| Nominal frequency | 50 Hz |
| European weighted efficiency | 97.44% |
| Minimum/Maximum voltage | 18/60 V |
| Minimum/Maximum MPP voltage | 28/45 V |
| Maximum short-circuit DC input current | 25 A |
| Ambient air temperature range | –40 to 65°C |

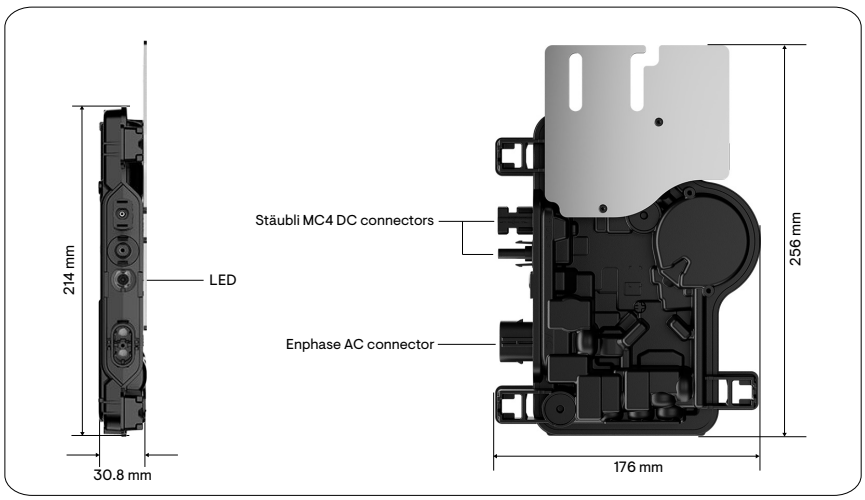


## Easy

- Lightweight and compact with integrated Stäubli MC4 connectors for easy installation
- Fast installation with simple AC cabling
- Faster firmware upgrades enabled by the new integrated circuit technology

## Reliable

- More than 1 million power-on hours of reliability testing
- Patented Burst Mode technology provides increased energy production
- Low-voltage DC and rapid shutdown for the ultimate fire safety
- Industry-leading warranty of up to 25 years[1]

## Compatible

- Supports all common PV module powers and cell architecture
- Compatible with existing IQ7, IQ8 systems. Seamlessly expand your solar capacity as your energy requirements increase[2]

[1] A 25-year warranty is valid, provided an internet-connected IQ Gateway is installed.
[2] For details, see the "Compatibility with IQ7, IQ8 Series Microinverters" section.

© 2026 Enphase Energy. All rights reserved. Enphase, the e and CC logos, IQ, and certain other marks listed at https://enphase.com/trademark-usage-guidelines are trademarks of Enphase Energy, Inc. in the U.S. and other countries. Data subject to change.

| Input data (DC) | Parameters | Units | IQ9N-A-INT |
|---|---|---|---|
| Typical module compatibility | — | — | No enforced DC/AC ratio and the maximum input power. Modules can be paired as long as the maximum input voltage is not exceeded and the maximum input current of the inverter at the lowest and highest temperatures is respected. See the module compatibility calculator at https://enphase.com/en-au/installers/microinverters/calculator. |
| Minimum/Maximum voltage | Udcmin/ Udcmax | V | 18/60 |
| Startup input voltage | Udcstart | V | 21 |
| Rated input voltage | Udc,r | V | 36.5 |
| Minimum/Maximum MPP voltage | Umppmin/ Umppmax | V | 28/45 |
| Minimum/Maximum operating voltage | Uopmin/ Uopmax | V | 18/58 |
| Maximum input current | Idcmax | A | 16 |
| Maximum short-circuit DC input current | Iscmax | A | 25<br>Maximum short-circuit current for modules (Isc) allowed to be paired with IQ9N Microinverters: 20 A (calculated with 1.25 safety factor as per IEC 62548). |
| Maximum input power[3] | Pdcmax | W | 560 |
| Maximum inverter backfeed current to array | Irms | A | 0 |

| Output data (AC) | Parameters | Units | IQ9N-A-INT |
|---|---|---|---|
| Maximum apparent power | Sac,max | VA | 427 |
| Rated apparent power | Pac,r | VA | 427 |
| Nominal grid voltage | Uacnom | V | 230 |
| Minimum/Maximum grid voltage | Uacmin/ Uacmax | V | 184/276 |
| Rated/Max. output current | Iacmax | A | 1.86 |
| Nominal frequency | fnom | Hz | 50 |
| Minimum/Maximum frequency | fmin/fmax | Hz | 45/55 |
| Max. units per single-phase 20 A circuit/per multi-phase 25 A circuit | — | — | 9 (L+N)/33 (3L+N)<br>For IQ Cable with 2.5 sq mm stranded conductors and using a 1.20 safety factor. The safety factors applied may vary based on local regulations or best practices, as well as upon the characteristics of the OCPD selected. |
| Recommended maximum units per single/multi-phase IQ Cable section to reduce voltage rise in IQ Cable | — | — | 7 (L+N)/15 (3L+N)<br>Centre feeding is the best practice. These design limits ensure voltage rise and line conductor resistance on the IQ Cable are maintained within acceptable limits. In locations with a risk of high grid voltage at the point of connection, it may be necessary to decrease the maximum number of microinverters on the IQ Cable section by as much as 50%. |
| Protective class (all ports) | — | — | II |
| Total harmonic distortion | — | % | <3 |

[3] The installer must not exceed the small-scale technology certificate (STC) wattage limit for PV modules when claiming the STC. Pairing PV modules with wattage above the limit may result in additional clipping losses. See the compatibility calculator at https://enphase.com/en-au/installers/microinverters/calculator.

| Output data (AC) | Parameters | Units | IQ9N-A-INT |
|---|---|---|---|
| Power factor setting | — | — | 1.0 |
| Power factor range | cos (phi) | — | 0.8 leading ... 0.8 lagging |
| Inverter maximum efficiency | ηmax | % | 97.95 |
| European weighted efficiency | ηEU | % | 97.44 |
| Maximum output fault current | Irms | A | 2.32 |
| Inverter topology | — | — | Isolated (HF transformer) |
| Night-time power loss | — | mW | 40 |

| Mechanical data | Units | IQ9N-A-INT |
|---|---|---|
| Ambient air temperature range | °C | −40 to 65 |
| Relative humidity range | % | 4 to 100 (condensing) |
| Decisive voltage class (DVC) | — | AC: DVC C \| DC: DVC B |
| Number of input DC connectors (pairs) per single MPP tracker | — | 1 |
| AC connector type | — | IQ Cabling (refer to the IQ Cable and accessories data sheet) |
| DC connector type | — | Stäubli MC4 |
| Dimensions (H × W × D) | mm | 214 × 176 × 30.8 (without mounting brackets) |
| Weight (with mounting plate) | kg | 1.1 |
| Cooling | — | Natural convection – no fans |
| Enclosure | — | Class II double-insulated, corrosion-resistant polymeric enclosure |
| IP rating | — | Outdoor - IP67 |
| Suitable for wet locations | — | Yes |
| Altitude | m | <3000 |
| Calorific value | MJ/unit | 15.0 |
| Noise level | dBA | <25 |
| AC overvoltage category | — | III |
| Pollution degree | — | PD3 |

| Standards | IQ9N-A-INT |
|---|---|
| Grid compliance (with IQ Relay) | AS/NZS 4777-2:2020 +A2 |
| Safety | EN IEC 62109-1, EN IEC 62109-2 |
| EMC | EN IEC 61000-3-2, EN IEC 61000-3-3, EN IEC 61000-6-2, EN IEC 61000-6-3, EN IEC 50065-1, EN IEC 50065-2-2, EN 55011[4] |
| Product labelling | CE, RCM |
| Advanced grid functions[5] | Power export limiting (PEL), phase imbalance management (PIM), loss of phase detection (LOP), power factor control Q (U), cos (phi) (P) |
| Microinverter communication | Power line communication (PLC) 110–120 kHz (Class B), narrowband 200 Hz |

[4] At STC within the MPP range.
[5] Some of these functions require an IQ Gateway Metered with current transformers and/or an IQ Relay installed.

## Compatibility with IQ7, IQ8 Series Microinverters

- IQ9N Microinverters can be added to existing IQ7 or IQ8 systems on the same IQ Gateway/IQ Combiner/IQ System Controller only in the following configurations: (i) Solar Only (ii) Solar Plus Battery (IQ Battery 5P) grid-tied or Solar Plus Battery (IQ Battery 5P) with backup and IQ System Controller 3 INT.
- IQ7 or IQ8 Series Microinverters cannot be added to a site with existing IQ9N Microinverters on the same gateway.
- A mixed system of IQ7, IQ8, and IQ9N will not support the microinverter-specific Sunlight Jump Start feature. However, a mixed system of IQ8 and IQ9N will support the Sunlight Jump Start feature.
- The combined peak power output of the IQ7, IQ8, and IQ9N Microinverters in the system must not exceed 150% of the IQ Battery array's rated power output. If the microinverter array exceeds this ratio, PV shedding must be implemented to shed excess PV when the system transitions to off-grid mode. However, this ratio (PV/ESS) increases to a 200% limit for a mixed system of IQ8 and IQ9N Microinverters.

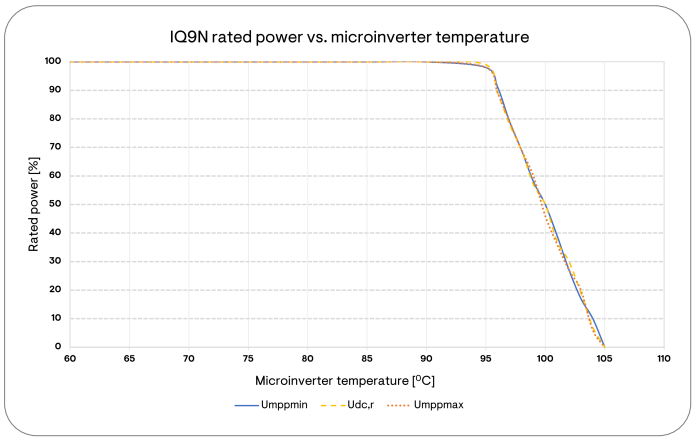


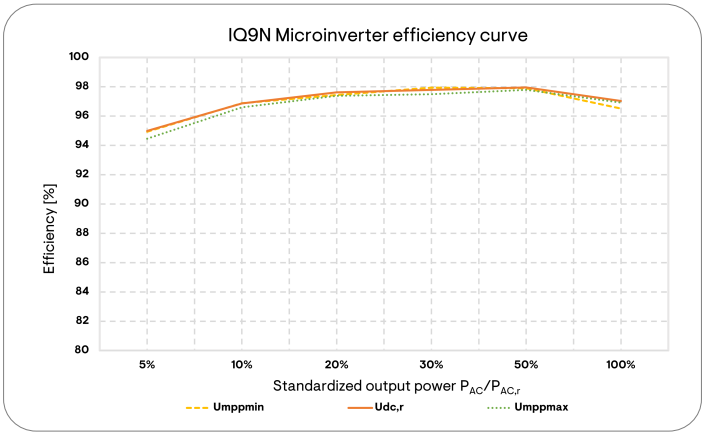


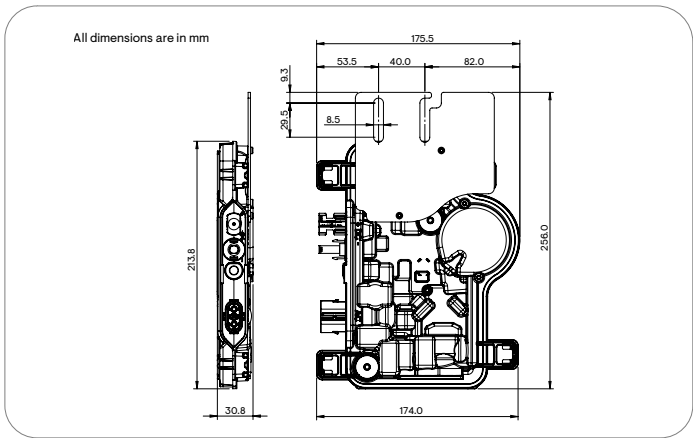


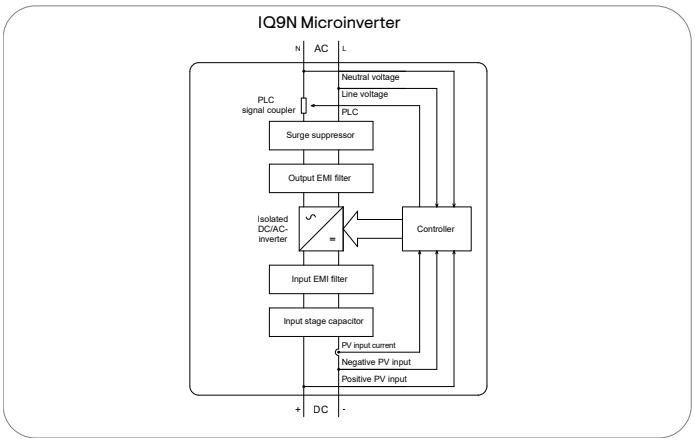


Assembled in India or the U.S.
Manufacturer: Enphase Energy Inc. 47281 Bayside Pkwy, Fremont, CA 94538, United States of America, Tel: +1 (707) 763-4784
Importer: Enphase Energy Aust. Pty/Ltd., 88 Market St., South Melbourne, VIC 3205. PH: +61 386691679

# Components of the Enphase Energy System

## IQ Battery

All-in-one AC-coupled storage solution that integrates seamlessly with your solar energy system, providing reliable backup power and intelligent energy management for maximum performance and energy savings.

## IQ System Controller

The IQ System Controller connects the house to the power grid, the IQ Battery, and the PV system with microinverters.

## IQ Gateway

The IQ Gateway is a device that performs energy management, provides internet connectivity, and integrates with the IQ Series Microinverters to provide complete control and insights into the Enphase Energy System.[6]

## IQ Relay 1P and IQ Relay 3P

Production and storage circuit, integrated Neutral Sensing-protection device with PLC-phase coupler (multi-phase) and DC current injection monitoring.

## IQ EV Charger 2

The IQ EV Charger 2 combines advanced hardware with AI-powered energy management to deliver seamless, reliable EV charging for every home. It optimizes charging based on the lowest utility rates and maximizes the use of solar energy.

## IQ Cabling

Install microinverters quickly and safely with IQ Cabling. With multi-phase IQ Cabling, the installed capacity is automatically distributed evenly across all three phases.

[6] A 25-year warranty is valid, provided an internet-connected IQ Gateway is installed.

# Revision history

| Revision | Date | Description |
|---|---|---|
| DSH-00859-3.0 | July 2026 | Added New Zealand as applicable region. |
| DSH-00859-2.0 | December 2025 | Initial release. |
| DSH-00859-1.0 | September 2025 | Preliminary release. |